CELETTE® MERCEDES BENZ CLASS C W204 / S204

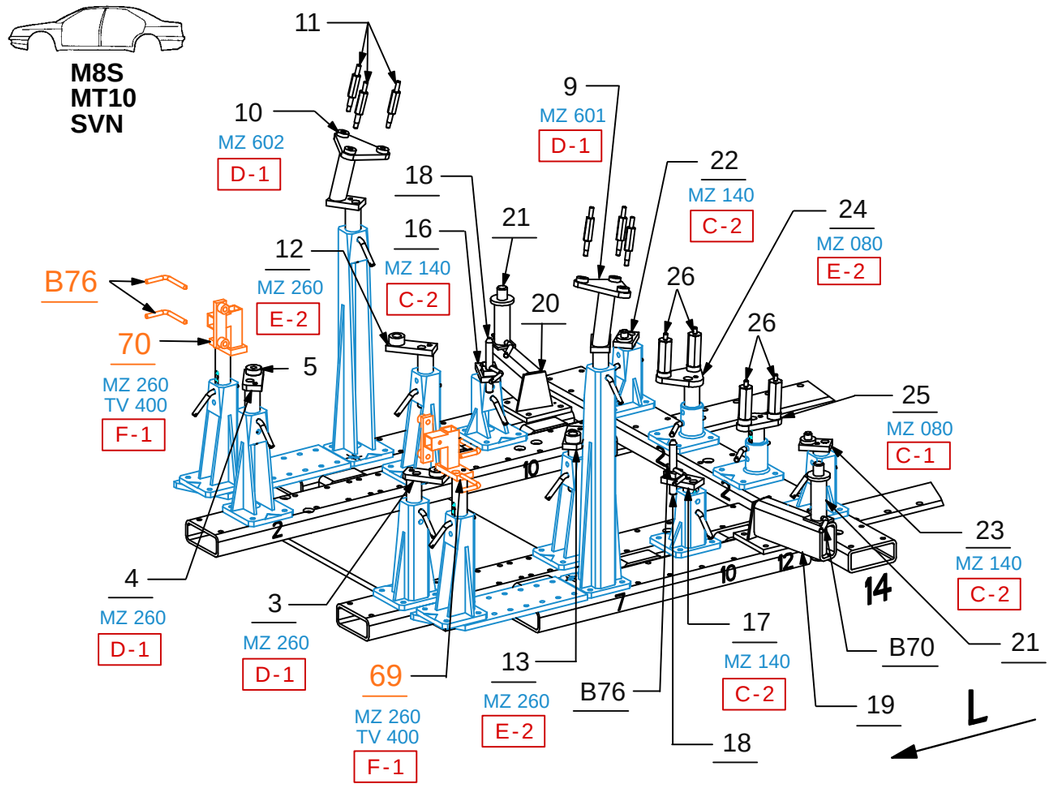

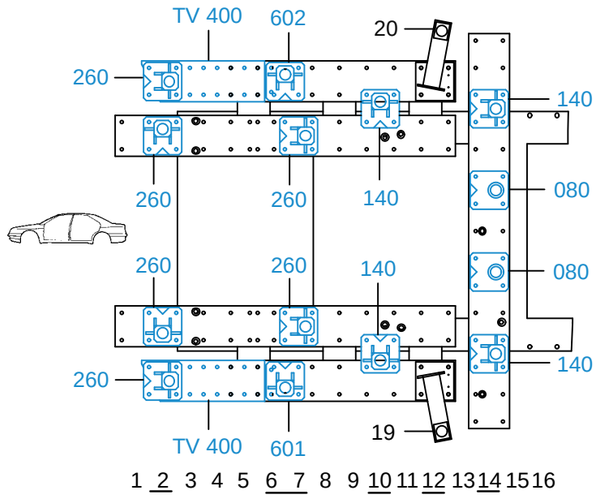

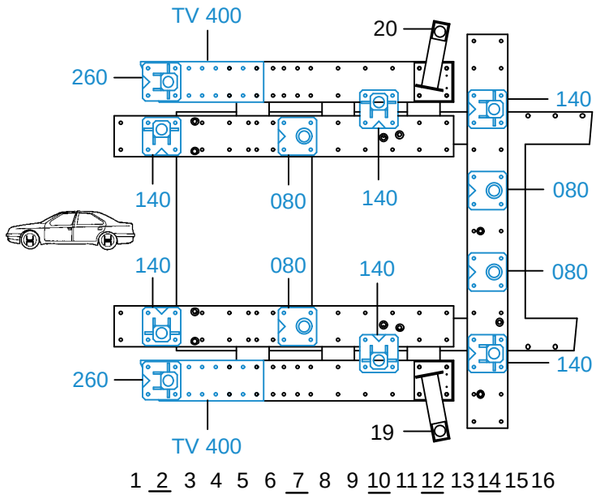

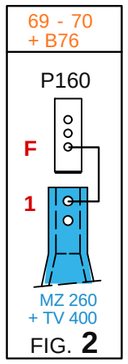

FIG. 2

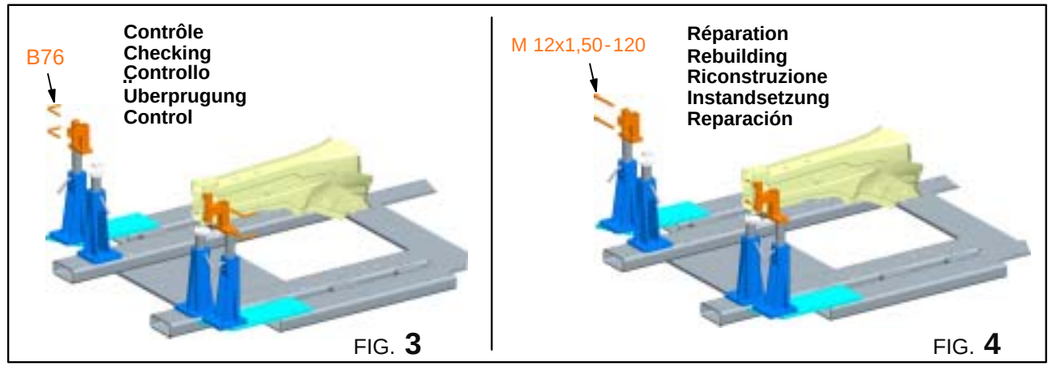

FIG. 3 FIG. 4

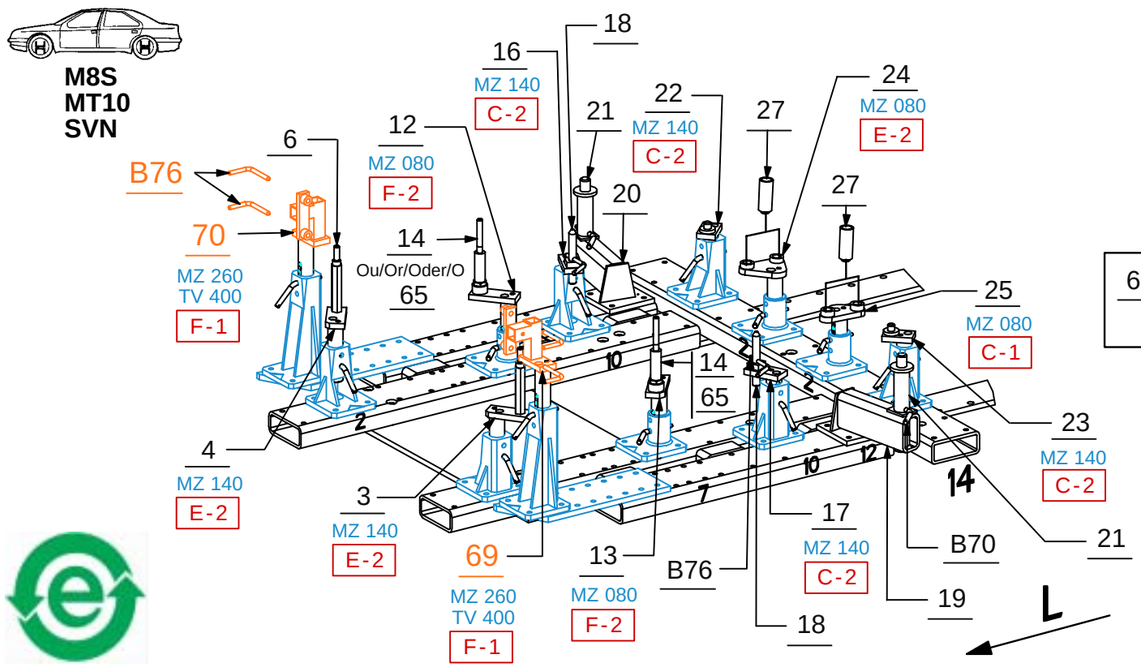

65 = Code M156+M63 und/oder 494/460 (AMG USA Canada)

XX **Avec ou sans mécanique**
With or without mechanical elements
Con o senza parti meccaniche
Mit oder ohne Aggregate
Con ó sin mecanica desmontada

REP.	REFERENCE	PDS	NB	PISTON	MZ
69 70	7204.5069 7204.5070 B76	1,4 1,4 0,1	1 1 4	P160 P160	260 260
	M 12x1,50-120		4		

complément au / complementary set to / complemento al / zusatz zu **7204.500**

7204.509

4 Kg	28.10.2008	420-D-37M1
7204.509-RVA3-1		00

MERCEDES BENZ

Copyright 2008 CELETTE S.A. - All rights reserved. No part of this document may be reproduced in any form, by photostat, xerography or any other means, or incorporated into any informational retrieval system, electronic or mechanical, without the permission of the copyright owner.

CELETTE

MERCEDES BENZ CLASS C W204 4 MATIC / S204 4 MATIC

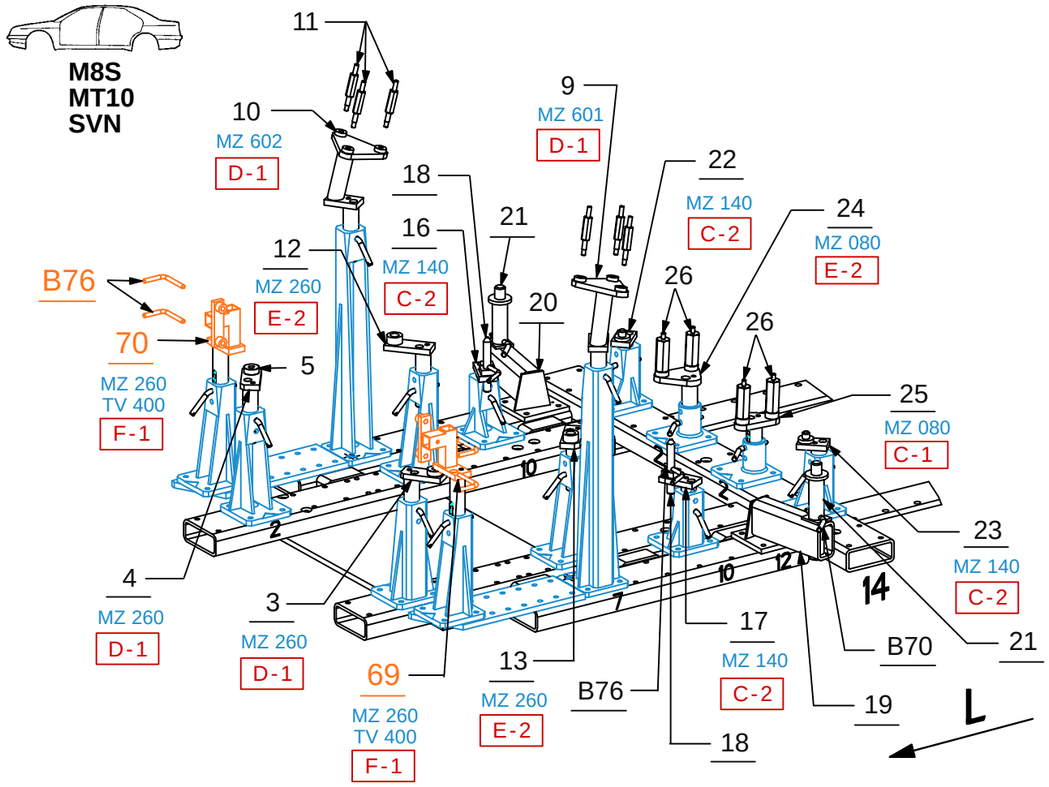

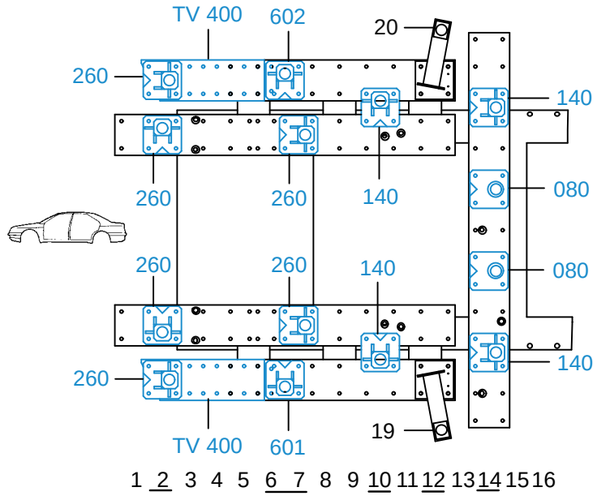

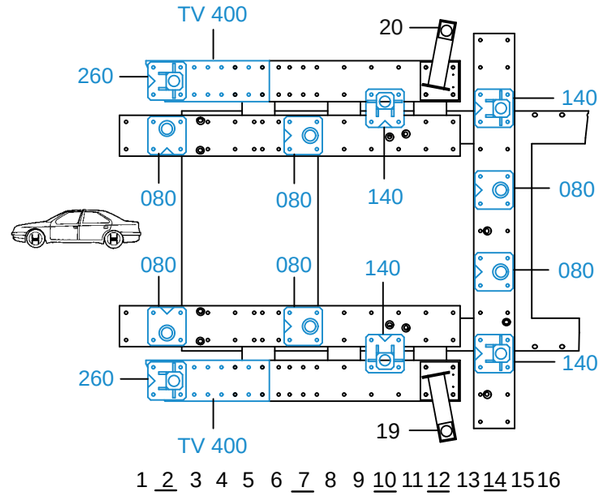

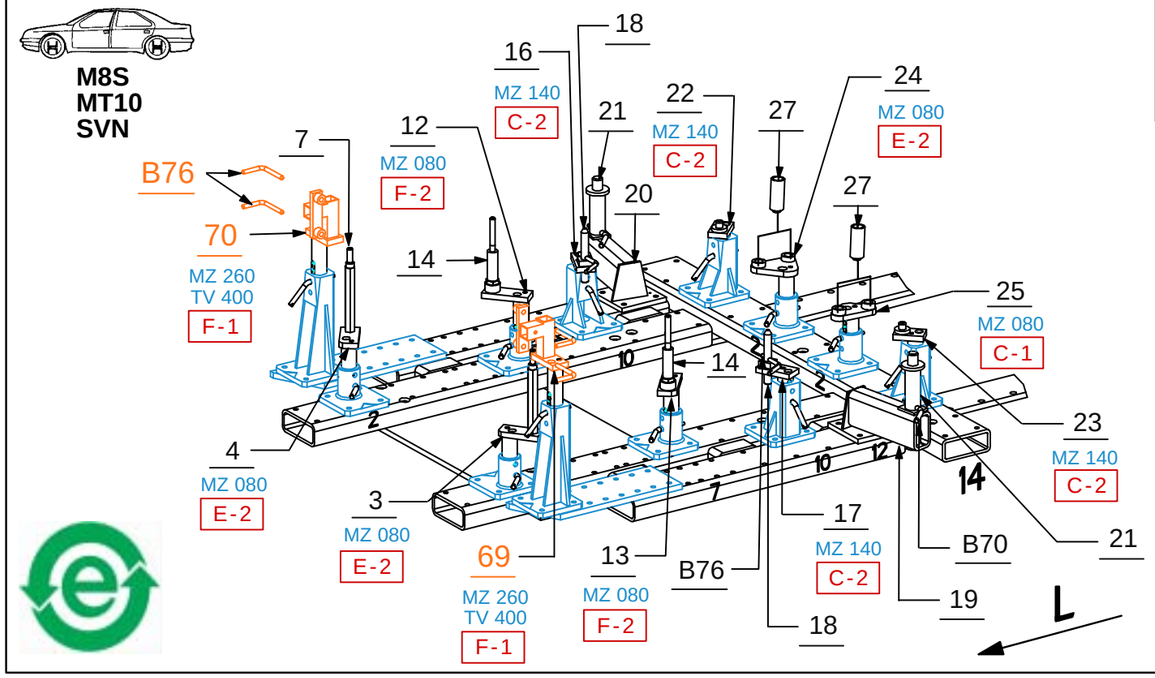

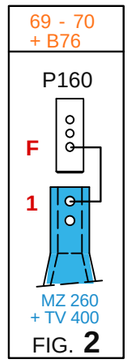

FIG. 2

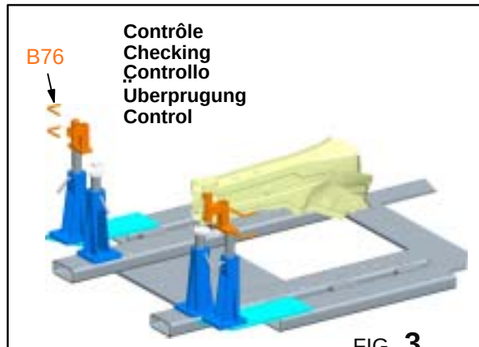

FIG. 3

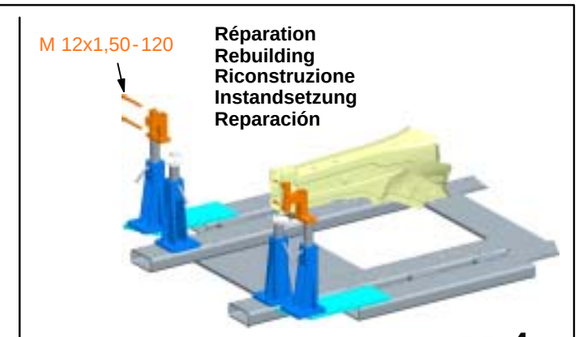

FIG. 4

XX Avec ou sans mécanique
With or without mechanical elements
Con o senza parti meccaniche
Mit oder ohne Aggregate
Con ó sin mecanica desmontada

MERCEDES BENZ

7204.509		
4 Kg	28.10.2008	420-D-37N1
7204.509-RVA3-1		00

Copyright 2008 CELETTE S.A. - All rights reserved. No part of this document may be reproduced in any form, by photostat, xerography or any other means, or incorporated into any informational retrieval system, electronic or mechanical, without the permission of the copyright owner.