CELETTE®

HONDA CIVIC VTEC - CRX VTEC

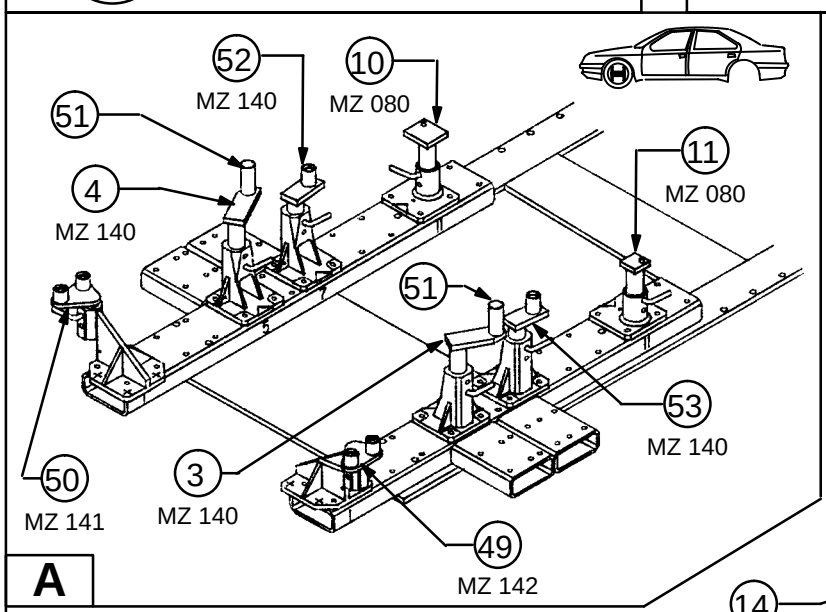

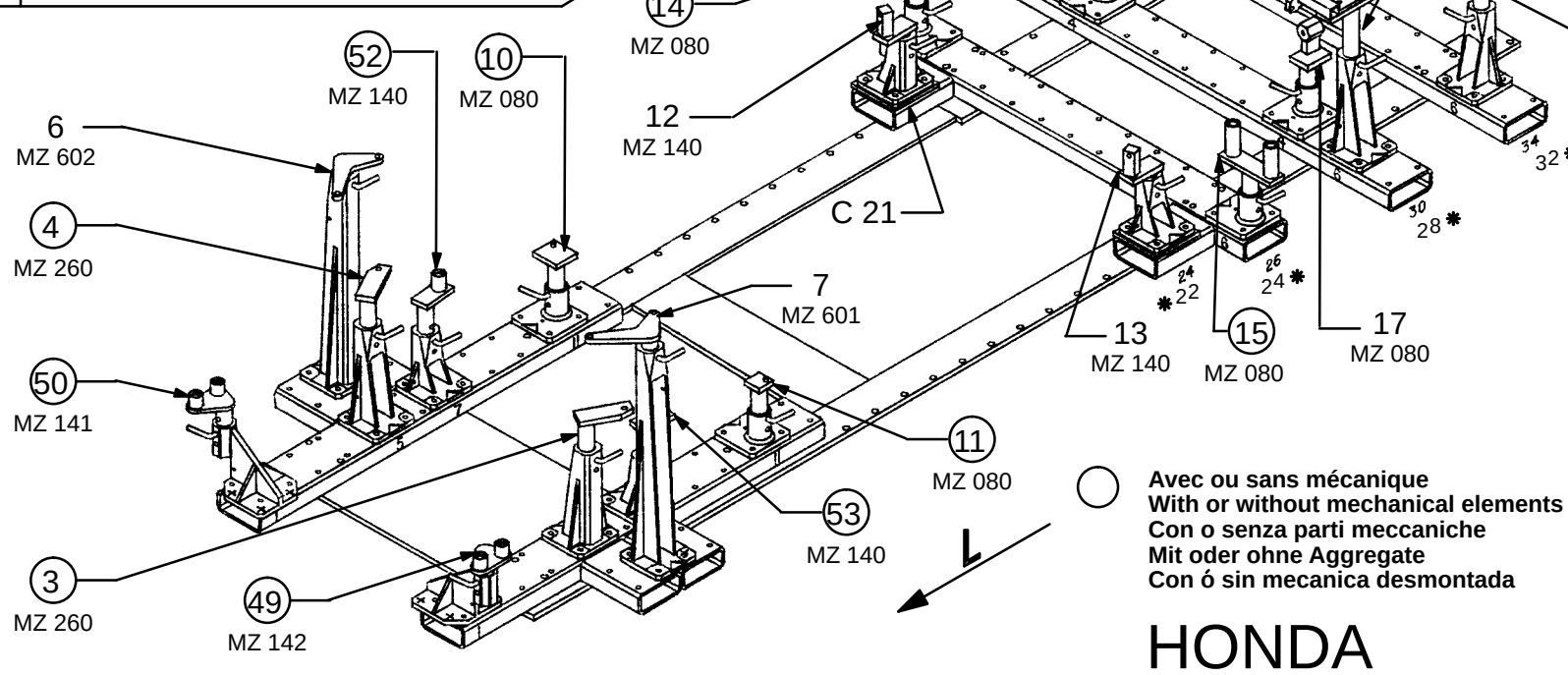

✱ CRX - VTEC

REP.	REFERENCE	PDS	NB	MZ
49	542.749	2,0	1	142
50	542.750	2,0	1	141
51	542.751	0,6	2	
52	542.752	2,5	1	140
53	542.753	2,5	1	140
	C.21	1,8	2	

complément au / complementary set to / complemento al / zusatz zu **542.300**

542.306

14 Kg	11.06.91	413-D-12C

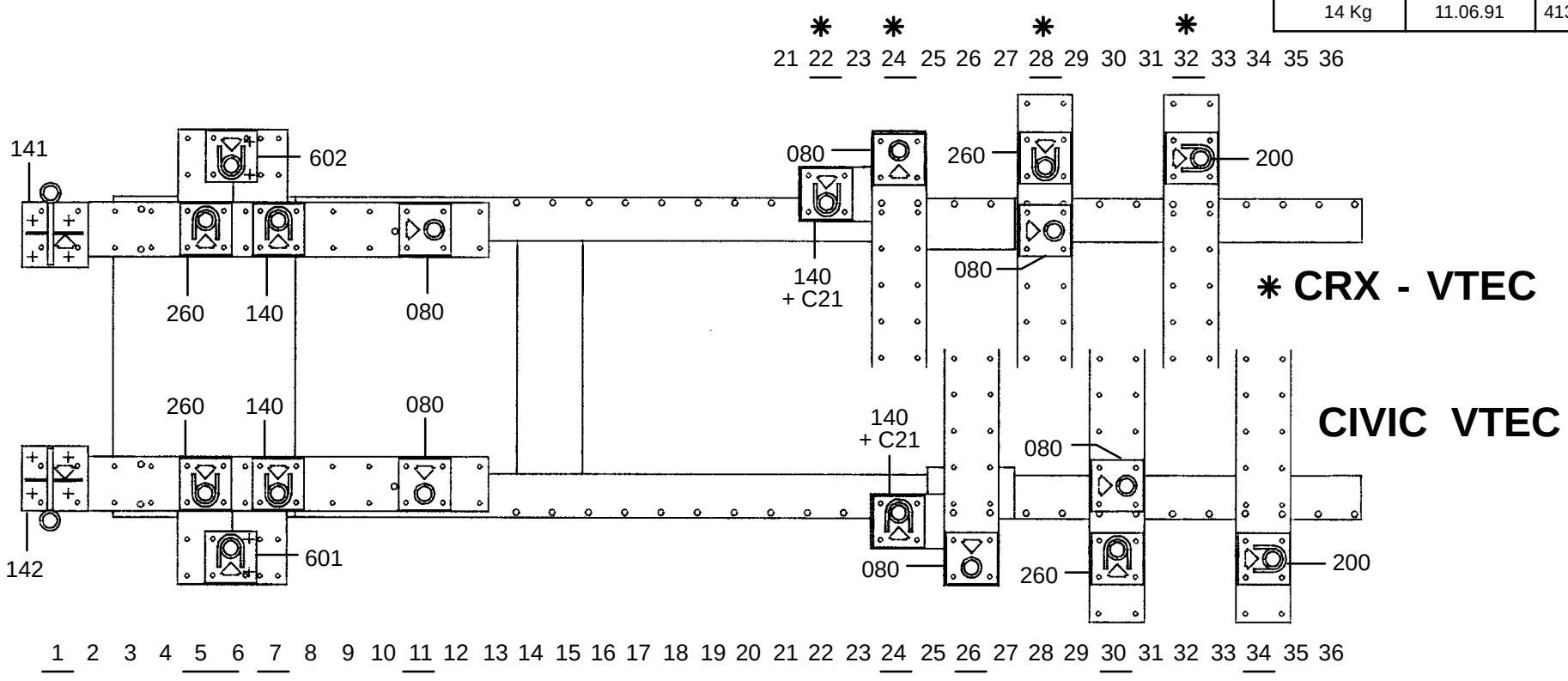

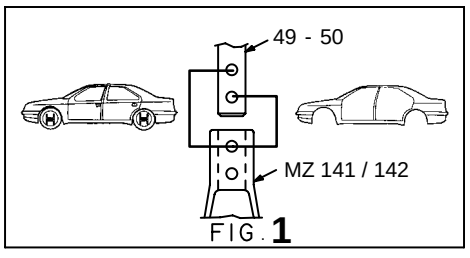

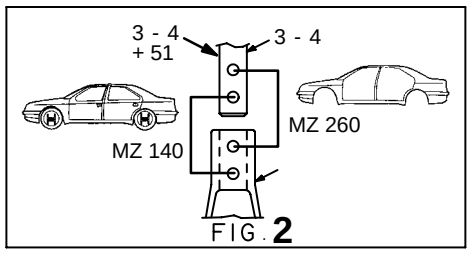

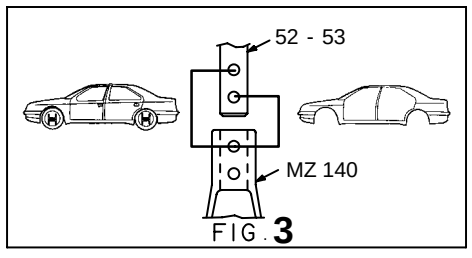

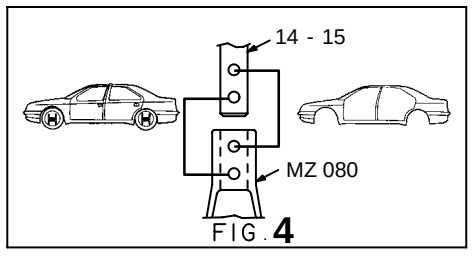

CELETTE®
VIENNE-FRANCE

© Copyright 1991 CELETTE S.A. - All rights reserved. No part of this document may be reproduced in any form, by photostat, xerography or any other means, or incorporated into any informational retrieval system, electronic or mechanical, without the permission of the copyright owner.